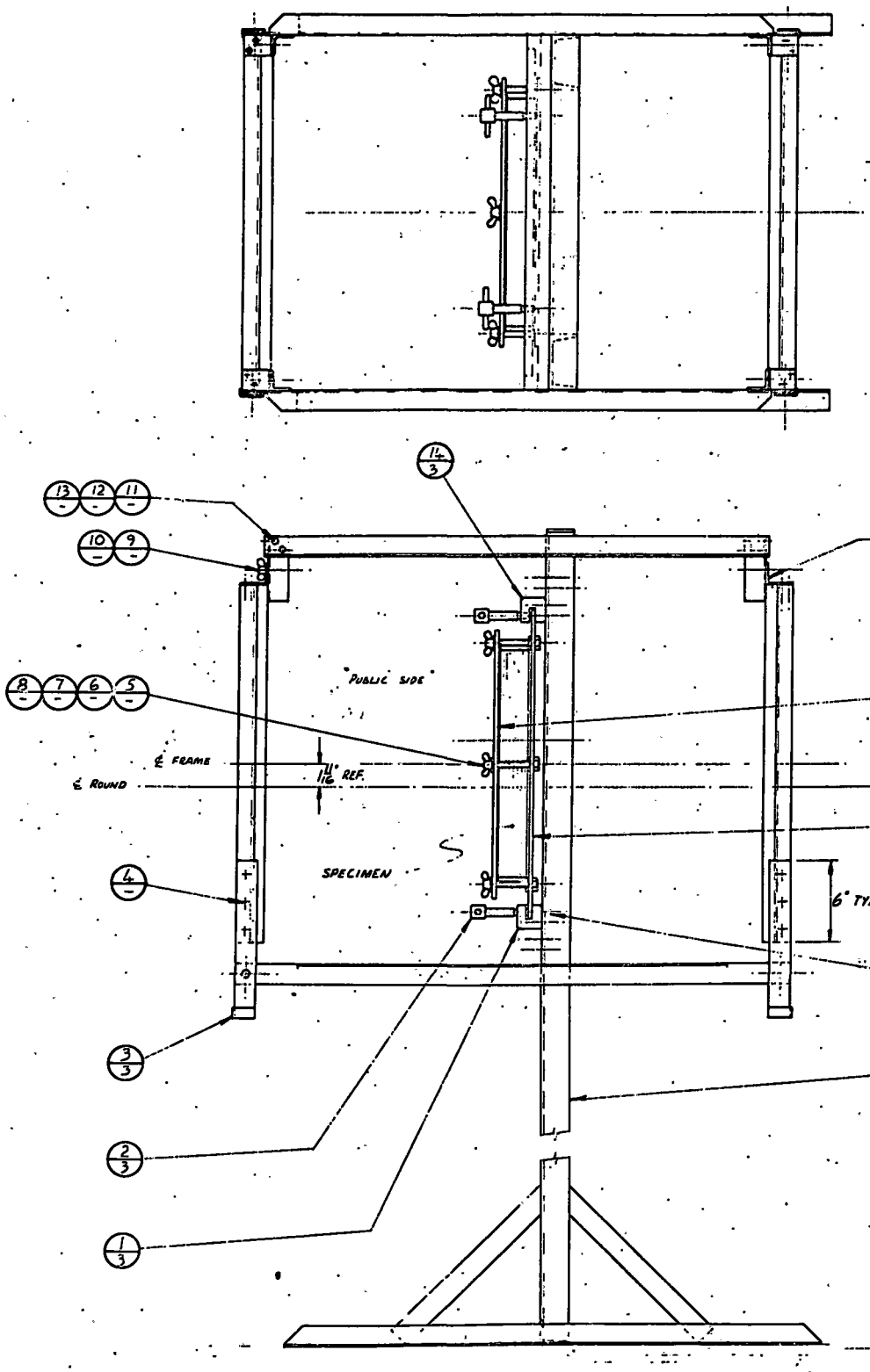

DATE	ALTERATIONS	DATE	ALTERATIONS

DO NOT SCALE

MOUNTING FRA

POLYMERS

29 APR 1980